Application Note

MEMETIS SHAPE MEMORY ALLOY (SMA) BISTABLE MINIATURE VALVE TESTKIT

Thank you very much for choosing our product. With the purchase, you have received a new generation of ultra-compact Shape Memory Alloy valves. With its size, it is suited even for complex fluidic systems with a multitude of fluidic components.

Important notes

Control: For testing purposes we recommend using the valves with the supplied electronic control unit (ECU), otherwise there is a risk that the valve will be damaged due to overheating. For customer-specific electrical control and instructions please contact our customer support via support@memetis.com.

Storage: Avoid moisture and store in a dry place. Temperatures should stay between -10 °C and 90 °C.

Operation Temperature: 10 °C to 50 °C

Fluid Compatibility: In the standard configuration, the wetted materials are PEEK (housing) and Silicone (diaphragm). Please check the compatibility of the fluids used with the valve materials before use.
If required, valves can be provided with other materials (PC, PMMA). Alternative diaphragm materials include FKM, Nitrile and EPDM. Please contact support@memetis.com for further information.

Pressure range: 0.1 to 2 bar @input for air and water.

Do not attempt to open the valve housing, as this destroys the valve irreversibly!

Please check our data-sheets for further information on the valve's properties.

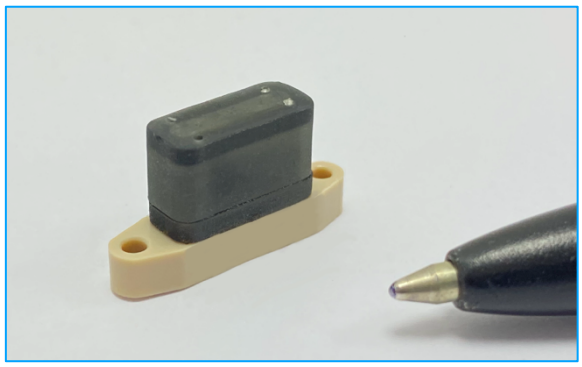

Fig. 1: Bistable valve BV1101

Integration of the valve

memetis miniature valves are by default provided as flange-mount variants. Two M1.6 screws are required for integration on a flat manifold with sealing. The dimensions of the drilling holes for fixation on the fluid plate and the fluid channels are shown in Fig. 2.
If you require a different fluidic connection, please contact us.

The scope of delivery includes a fluidic test adapter, on which a valve can be mounted using two M1.6 screws and tubes can be attached via Luer connectors. Luer to tube adapters are also included. The inlet and outlet are marked on the fluidic test adapter.

The correct orientation of the valve must be taken into account when mounting the valves. The fluid inlet and outlet openings in the valve must match the fluid openings in the fluid test adapter. The central opening is for the fluidic inlet (see drawing).

If you prefer to manufacture your own fluidic backplane, you can use the enclosed PDMS sealing discs to seal the valve against the backplane. For this purpose, milled recesses of 0.25 mm depth must be provided on the fluid plate with the dimensions shown in Fig. 2.

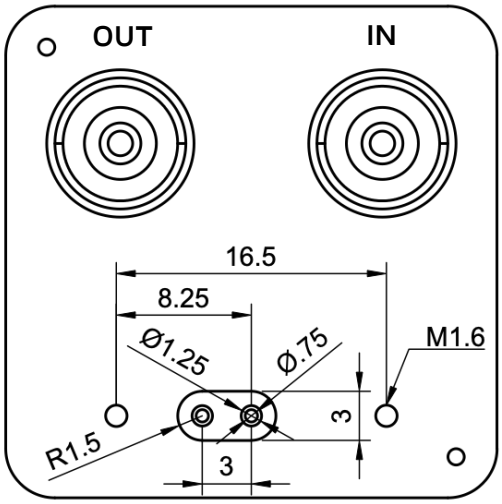

Fig. 2: Fluidic interface (Luer-adapter) with indicated fluidic inlet and outlet. All units in mm.

The dimensions of the bistable valve can be seen in Fig. 3.

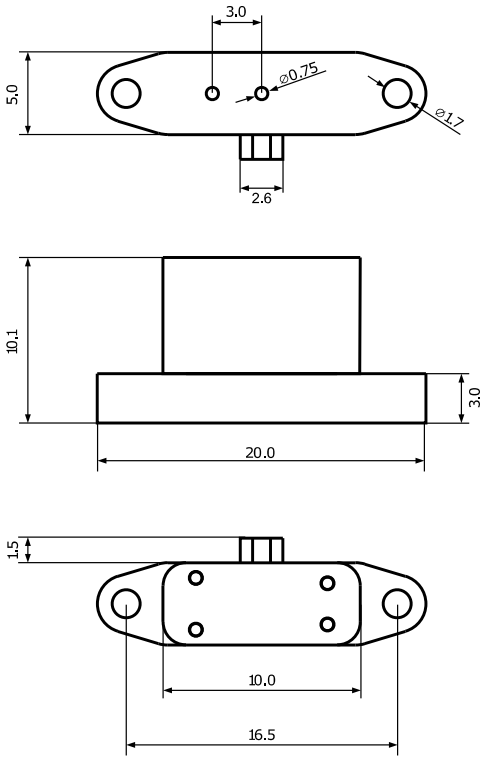

Fig. 3: Dimensions of the bistable valve. All units in mm.

Electronic control unit

memetis offers a pre-programmed electronic control unit (ECU) to operate the valve intuitively and give you an easy start (Figure 4).
All in- and outputs of the ECU can be seen in Figure 5.

Fig. 4: Electronic control unit for the control of the bistable valve.

Powering the ECU
The ECU is powered via a micro USB cable. It can be connected to a PC or a 5 V USB plug. The maximum power that is available depends on the source the ECU is connected to. On a USB charger wall plug up to 1500 mA can be drawn, on a PC connection 100 mA/500 mA is the limit (depending on the USB host). In any case, the ECU will monitor the current that it consumes and detects if more power is consumed than allowed.
If an over-current condition is detected, the outputs will be turned off immediately and cannot be turned back on for 2 s. The white LED will flash.
If this happens, try using another power source. A USB charger with a 2 amp rating gives the highest output power.

Connecting a valve
Make sure you select an ECU configured for bistable valves. These units have a **black** front and back panel and are labeled on the underside with 'bistable'.
Connect the cables of the bistable valve to both channels of the ECU. The cable from the valve that is farther away from the fluidics connection controls the closing operation of the valve. The other cable controls opening the valve.

Which ECU channel opens/closes the valve depends on the cable connection from the valve to the ECU.

Switching a valve

To open the valve, press the push button for the respective channel. Which channel that is depends on the cable connection to the valve. The valve will be powered for 300 ms (the blue LED will light up) at room temperature and then the output will automatically switch off. To close the valve press the push button for the other channel.
If a blue LED starts flashing, one of the connections to the valve is broken and the ECU is unable to maintain the required output current.
In addition to the push buttons, the valve can be switched via the IO channels on the back side of the unit. The valve will be opened when the respective IO channel goes HIGH and closed when the other channel goes HIGH.

Using the IO interface

The IO interface on the back side of the unit can be used to enable the output channels with a range of input voltages.
The two inputs are electrically isolated (with opto-coupler). Any voltage from **1.8 V to 5 V** can be used as long as the **polarity** is correct. The positive and negative side of each input is labeled with + and - signs.
The input will draw a current of around 2 mA with a 1.8 V signal and around 10 mA with a 5 V signal. The absolute maximum input current is 20 mA.
The IO interface can directly be connected to Raspberry Pi or Arduino GPIO pins. The positive input should be connected to the GPIO pin and the negative input to GND.

LEDs

The white LED on the front of the unit will light up after powering on the ECU.
If too much current is drawn from USB, this LED will flash.
The blue LEDs on the front will light up if the respective output is enabled and the output current is correct. These LEDs will flash if the ECU is unable to maintain output current regulation.

Data connection to the ECU

A digital interface to the ECU is available via USB (virtual COM port) and I2C.

The ECU implements a serial communication protocol to set the output current, enable/ disable output channels and set/ read various configuration parameters. In addition, the data connections allow reading back the momentary output current and voltage.
The USB interface can be used to power the ECU and communicate at the same time. This allows the valves to be controlled by a PC with a single connection to the ECU.
The I2C connector is directly connected (not isolated) to the internal circuit and has a strict 3.3 V requirement. Do **not** connect a 5 V Arduino I2C interface to the ECU.

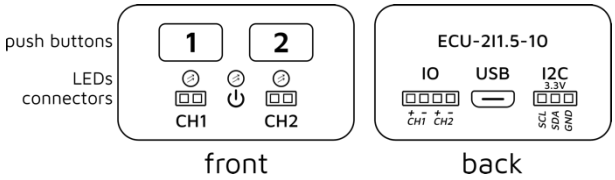

Fig. 5: Electronic control - Inputs, controls, and outputs.

If you have any problems with the electrical control unit, you can contact our support team at support@memetis.com directly.

Contact information

If you have any questions regarding possible adaptations, please write to us.

memetis GmbH
Gablonzer Str. 27
76185 Karlsruhe, Germany

Tel. +49 721 47000240
Email support@memetis.com